Description:	TOLERANCES UNLESS OTHERWISE SPECIFIED:	Drawing No:	IT-163	
SL1 x RD-1, SQ-1 SLIDING DOOR LOCK INSTALLATION INSTRUCTIONS	X.X (METRIC)= ±0.5 X.XX(METRIC)= ±0.15 0.00"(UNIFIED)= ±.015" 0.000"(UNIFIED)= ±.005"	Drawn By:	JWB	
FR International™ 1011 3rd Avenue S.W. Carmel, IN. 46032		Orig.Date	03-16-23	
	Rev. Date:	7-15-26	Rev.:	A

A) RD-1 TRIM, THUMB TURN, INSIDE
B) RD-1 TRIM, COIN TURN, OUTSIDE
C) DOOR EDGE FINGER PULL
D) SET SCREW
E) SL1 SLIDING DOOR LOCK
F) MOUNTING SCREWS, LOCK CASE, 2x
G) MOUNTING SCREWS, STRIKE PLATE, 2x
H) STRIKE PLATE

OPTIONAL SQ-1 TRIM
I) SQ-1 TRIM, THUMB TURN, INSIDE
J) SQ-1 TRIM, COIN TURN, OUTSIDE
K) DOOR EDGE PULL, SQUARE

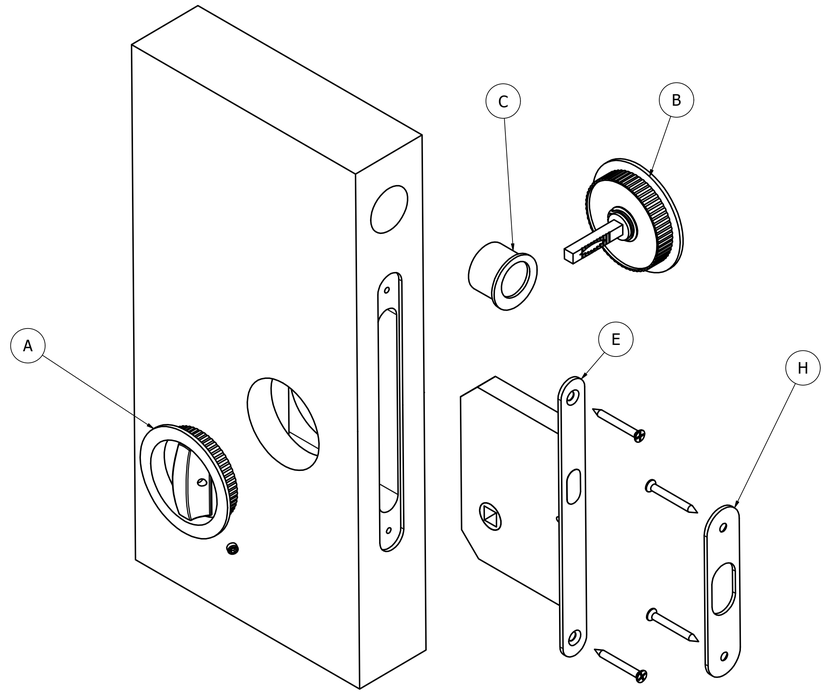

SQ-1 OPTION

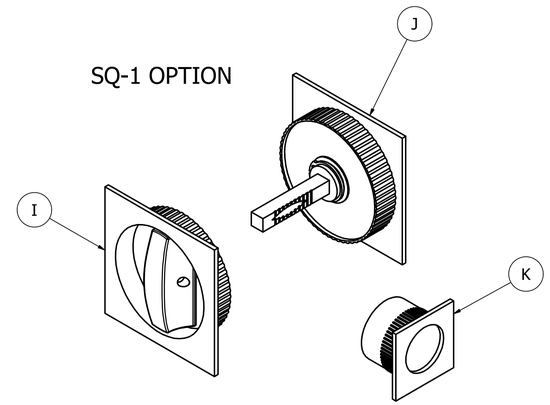

STEP-1: LOCK INSTALLATION
1) PREPARE THE DOOR ACCORDING TO DP-163.
2) INSTALL SL1 LOCK BODY, "E", USING THE 2x SCREWS, "F".

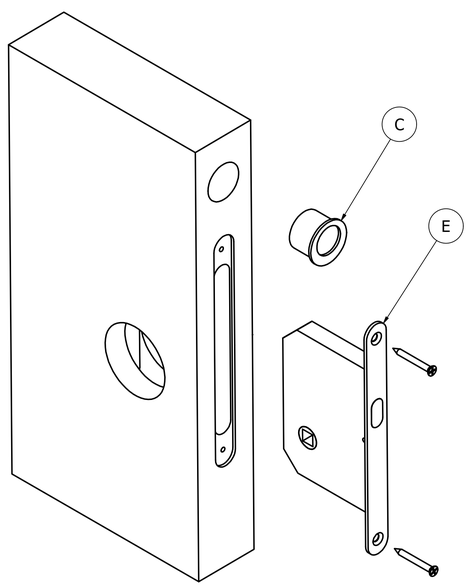

STEP-2: STRIKE PLATE INSTALLATION
1) INSTALL THE STRIKE PLATE, "H", INTO THE STRIKE PREP.
2) INSERT THE 2x SCREWS, "G", TO RETAIN THE STRIKE PLATE.

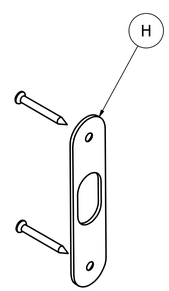
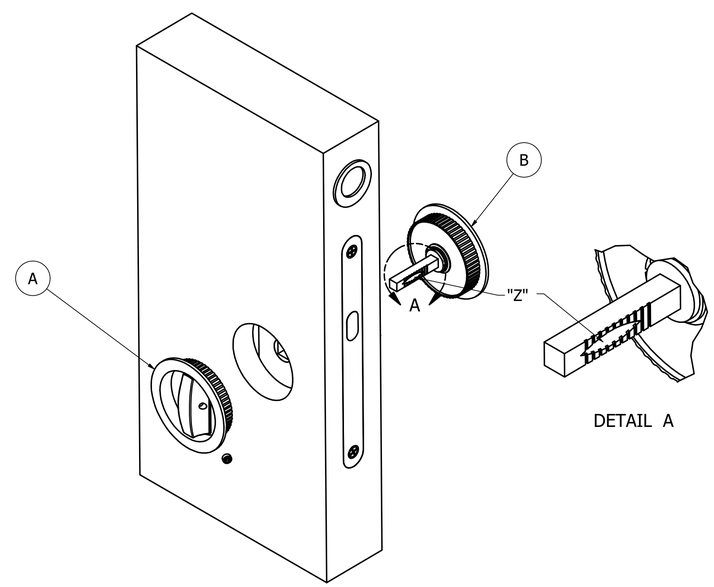
STEP-3: TRIM INSTALLATION
1) INSERT THE OUTSIDE COIN TURN TRIM, "B" INTO THE PREPPED CAVITY ON THE DOOR SURFACE.
2) ROTATE THE COIN TURN TO POSITION THE SPINDLE SO THAT THE GROOVE "Z" MATES WITH THE SET SCREW ON THE TURN KNOB SIDE OF THE TRIM.
3) INSERT THE INSIDE TURN KNOB TRIM OVER THE SPINDLE.
4) INSERT THE SET SCREW TO FIX TRIM TO DOOR.
5) CHECK FOR NORMAL OPERATION.