| Description: | TOLERANCES UNLESS OTHERWISE SPECIFIED: X.X (METRIC)= ±0.5 X.XX(METRIC)= ±0.15 0.00"(UNIFIED)= ±.015" 0.000"(UNIFIED)= ±.005" | Drawing No: IT-351 | |
|---|---|---|---|
| SL5 INSTALLATION INSTRUCTIONS FOR SL5-26, TK x COIN TURN | | Drawn By: | JWB |
| FR International ™ 1011 3rd Avenue S.W. Carmel, IN. 46032 | | Orig.Date | 04-20-22 |
| | Rev. Date: | 07-12-22 | Rev.: A |

A) MORTISE STRIKE KIT COMPONENTS
B) MORTISE LOCK/FACEPLATE
C) OUTSIDE LEVER/ROSE TRIMSET
D) INSIDE BACKPLATE MOUNTING BASE
E) COIN TURN TRIM
F) MOUNTING SCREWS
G) SET SCREWS, LEVER (NOT SHOWN)
H) INSIDE LEVER/ROSE TRIMSET
I) SPINDLE
J) TURN KNOB TRIM
K) FASTENERS FOR TURN KNOB/COIN TURN TRIM

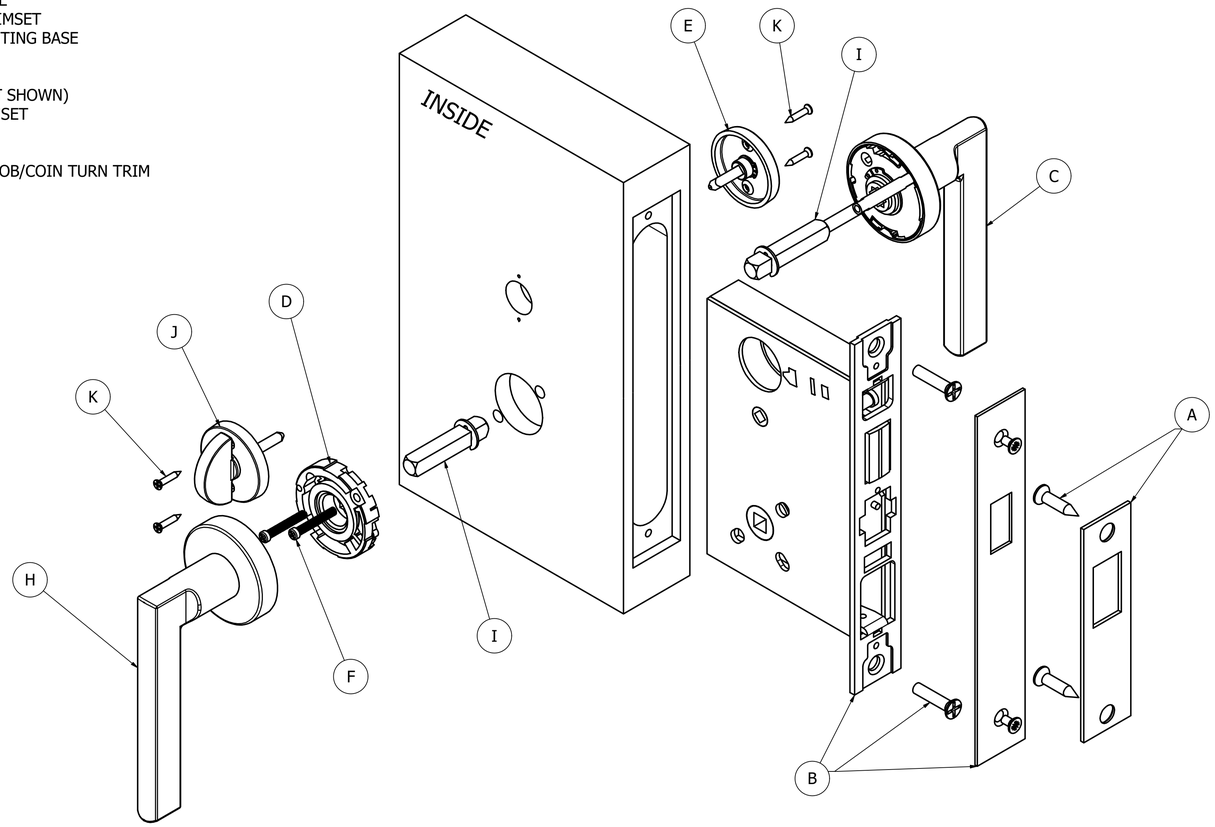


STEP 1)
A. PREPARE THE DOOR USING DOOR PREP GUIDE, DP-351.
B. INSERT THE LOCK CASE INTO THE DOOR CAVITY AND SECURE WITH THE CORRECT FASTENERS.

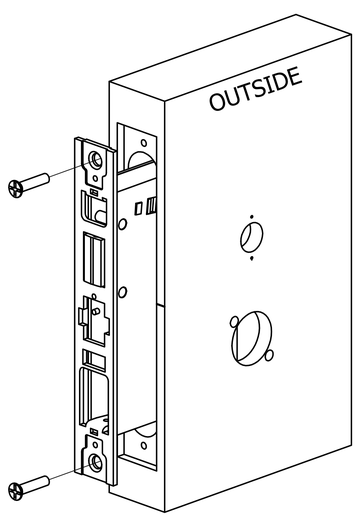


STEP 2)
A. INSERT THE OUTSIDE LEVER SPINDLE "I" INTO THE MORTISE LOCKCASE.
B. INSERT THE OUTSIDE TRIMSET "C" CAREFULLY ALIGNING THE SPINDLE THROUGH APPROPRIATE SQUARE HOLE AND INTO LEVER--MAKE SURE LEVER IS POSITIONED IN THE DOWNWARD DIRECTION AS SHOWN.
C. INSERT THE 2 MOUNTING POSTS INTO THE APPROPRIATE HOLES IN THE DOOR.
D. INSERT THE SPINDLE "I" INTO THE INSIDE MORTISE CASE HUB.
E. ALIGN THE BACKPLATE MOUNTING BASE "D" TO THE APPROPRIATE SPINDLE HOLE AND SLIDE DOWN TO FACE OF DOOR.
F. INSERT THE (2) MOUNTING SCREWS "F" AND TIGHTEN FIRM. DO NOT OVER-TORQUE TO ELIMINATE THE CHANCE OF DOOR COMPRESSION.

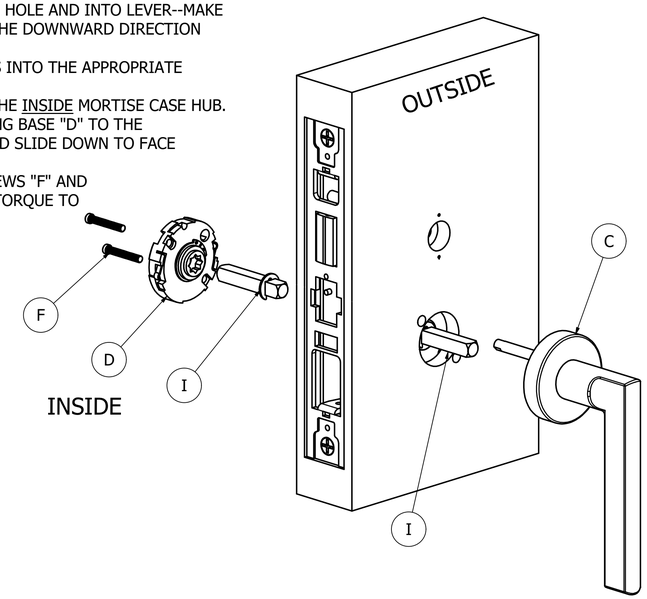


STEP 3)
A. WITH THE DEADBOLT EXTENDED, AND THE TURN KNOB POSITIONED HORIZONTAL, INSTALL THE INSIDE TURN KNOB "J" INTO TURN KNOB HUB. INSERT SCREWS "K" AND TIGHTEN SCREWS.
NOTE: MAKE SURE THAT THE SPINDLE IS CENTERED WITHIN THE HUB--FAILURE TO DO THIS COULD RESULT IN ROUGH OPERATION.
B. INSTALL THE OUTSIDE EMERGENCY COIN TURN TRIM "E". INSERT AND TIGHTEN SCREWS "K".
NOTE: MAKE SURE THAT THE SPINDLE IS CENTERED WITHIN THE HUB--FAILURE TO DO THIS COULD RESULT IN ROUGH OPERATION.

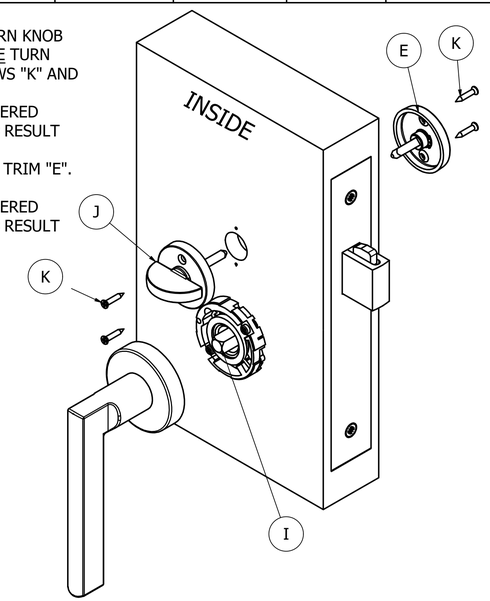


STEP 4)
A. INSERT INSIDE LEVER/ROSE ASSEMBLY "H" OVER THE SPINDLE "I" (NOT SHOWN) AND ROTATE THE ROSE TO ALIGN THE (4) LUGS WITH THE (4) MATING GROOVES ON THE MOUNTING BASE.
B. ONCE ALIGNED, PUSH FIRMLY UNTIL ROSE IS AGAINST DOOR SURFACE.
C. USING THE STRAP WRENCH, ROTATE THE ROSE CLOCK-WISE APPROXIMATELY 15°-20° UNTIL IT IS SEATED PROPERLY.

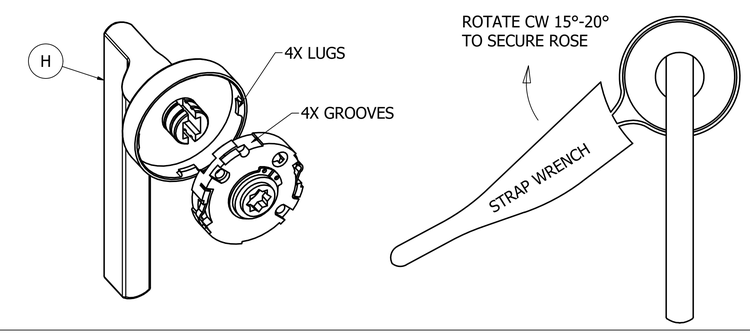

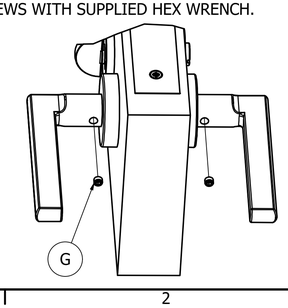
STEP 5)
A. INSERT THE LEVER SET SCREWS "G" INTO BOTH THE INSIDE AND OUTSIDE LEVERS.
B. FIRMLY TIGHTEN THE SET SCREWS WITH SUPPLIED HEX WRENCH.