NOTES:
1) DIMENSIONS ARE "NOT TO SCALE", THIS TEMPLATE IS FOR DIMENSIONAL LOCATIONS ONLY.
2) STRIKE LOCATION ON FRAME MUST BE ADJUSTED FOR THICKNESS OF DOOR SILENCERS, WHEN USED.

Description:
PB60 PRIVACY BOLT, DOOR PREP
TK x CT TRIM, 60mm(2-3/8")BACKSET

FR International™
1011 3rd Avenue S.W. Carmel, IN. 46032

TOLERANCES UNLESS OTHERWISE SPECIFIED:
X.X (METRIC)= ±0.5
X.XX(METRIC)= ±0.15
0.00"(UNIFIED)= ±.015"
0.000"(UNIFIED)= ±.005"

Drawing No:	DP-450		
Drawn By:	JWB		
Orig.Date	05-01-24		
Rev. Date:	02-20-25	Rev.:	A

NOT TO SCALE

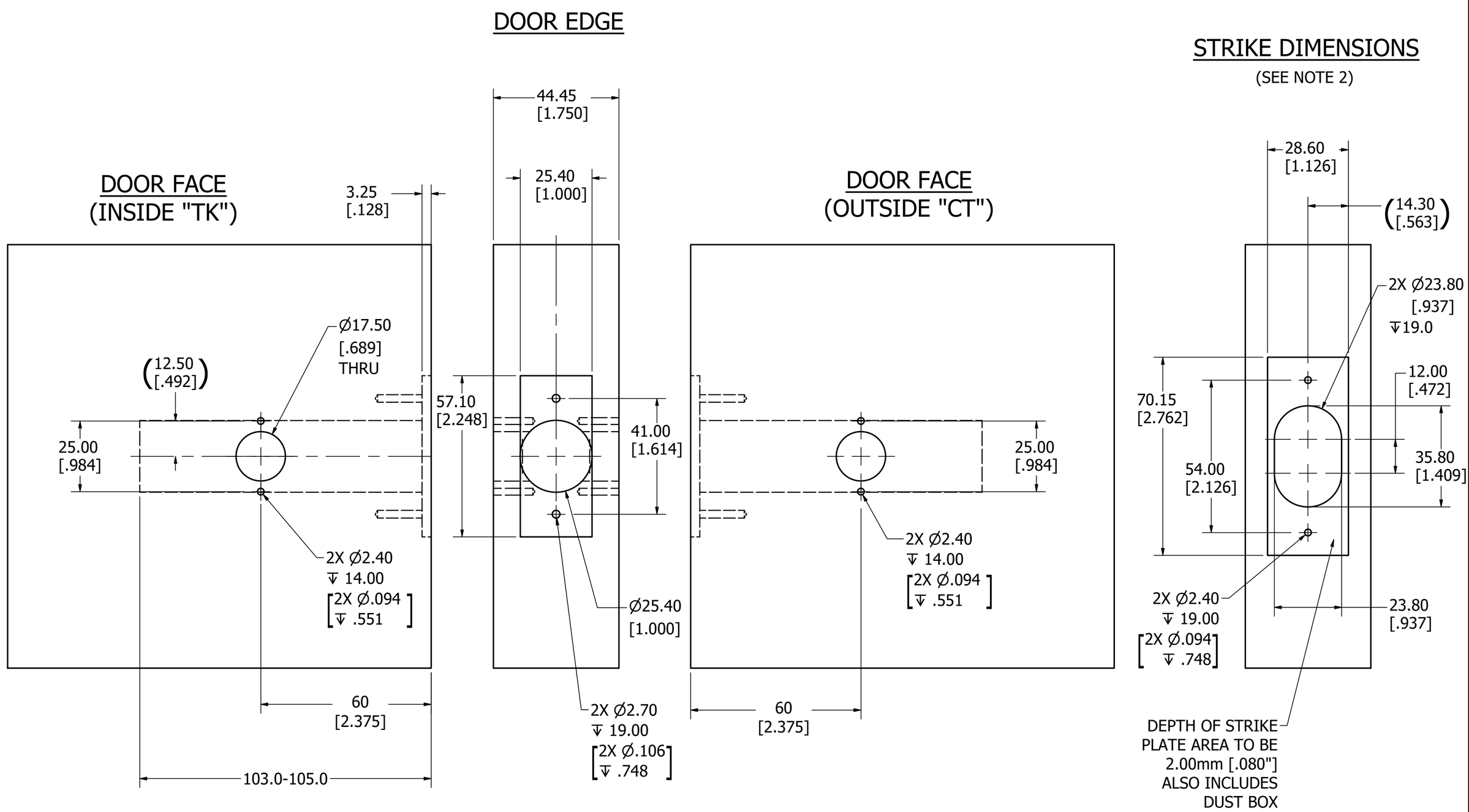

NOT TO SCALE